TambortechDoors
REVEAL THE SPACE, CONCEAL THE CLUTTER

Recommended specifications for SPLASHBACK PANTRY with Tambortech Door as shown in Tambortech video.

DESIGN POINTS TO CONSIDER.

[a] This drawing depicts the pantry shown in our video. The shelving configuration is designed for storage of a variety of items including cutting boards, large packets of cereal, canned food, etc.

[b] For ease of installation, manufacture a top Unit A [VOID] & a bottom Unit B [PANTRY]. The top VOID unit must be constructed with sufficient strength to hold it's own weight plus the weight of the wall units and the wall unit contents. While a void is necessary to enable fixing the pantry to the wall, the unit should have a full back, full top & substantial front fixing rails [reinforced with gussets/divisions].

[c] The full width of the pantry must be clear for installation of, and access to, the Tambortech Door.

[d] Reduce the height of the VOID Unit gables by 16 mm to allow the extended top of the wall units to sit on the top of the VOID unit. This will aid both support and ease of installation

[e] The benchtop should be a minimum of 800 m. All storage can be easily reached at the **recommended width of 900 mm.**

[f] To maximise shelf space and allow for the roll thickness of the Tambortech Door, the internal pantry height should be a MINIMUM of 700 mm - the gable is 700 mm plus the thickness of the top. The splash back height would then be a minimum of 600 mm up to a maximum of 660 mm to suit wall unit gable height.

[f] The wall unit acts as the Top Pelmet for the Tambortech Door. If the splashback & Side Pelmet height is 600 mm, the Pelmet coverage will be 100 mm and, if the splashback & Side Pelmets increase to a maximum of 660 mm, the pelmet coverage will reduce to the minimum of 40 mm.
If a splashback higher than 660 mm is required, increase the internal pantry height by the same amount above the 660 mm - don't decrease the distance between the top shelf and the pantry top.

[h] A rubber door stop is required, each side, to act as a stop for the handle backplate if the Pelmet coverage is more than 40 mm. Tambortech do not supply the door stops.

Detail B

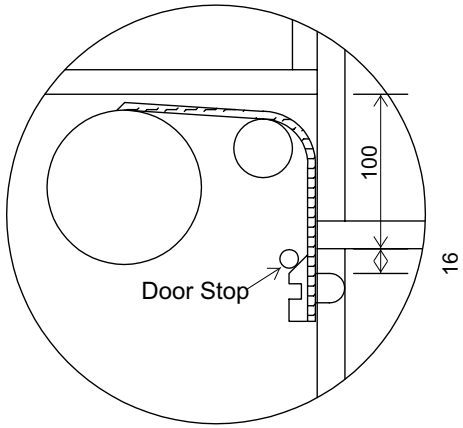

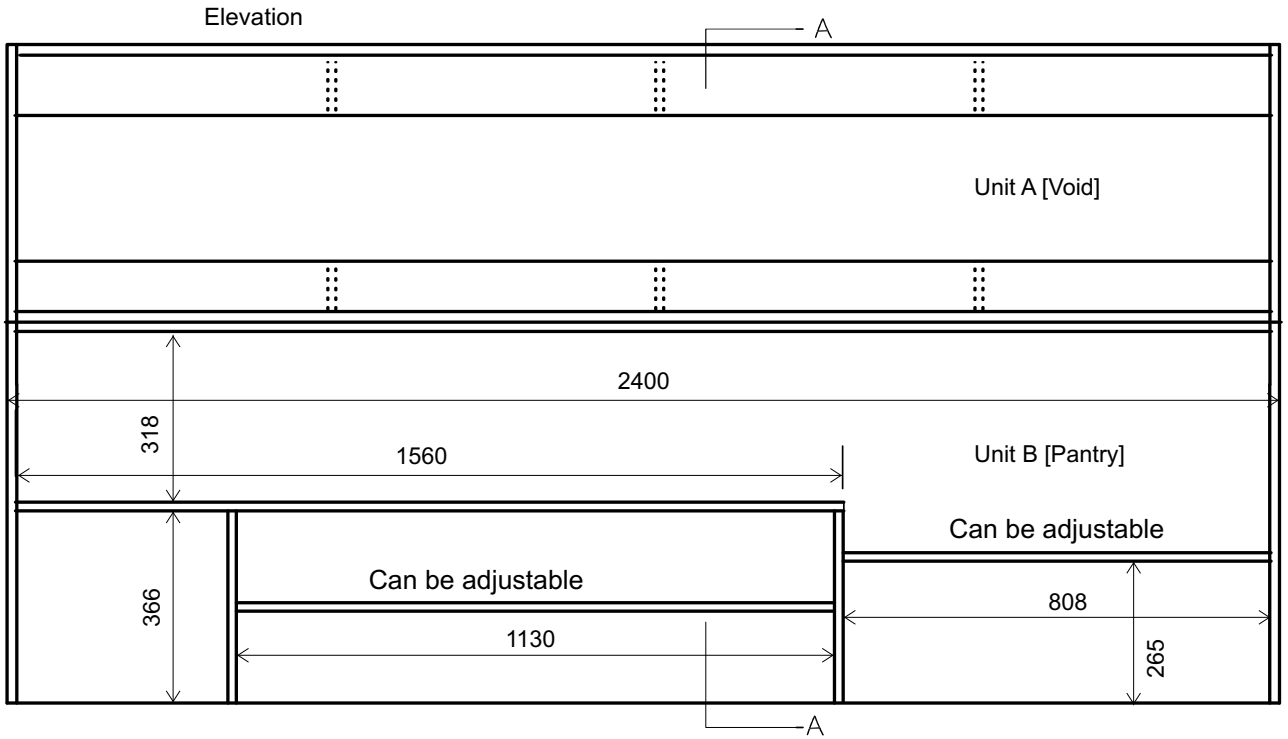

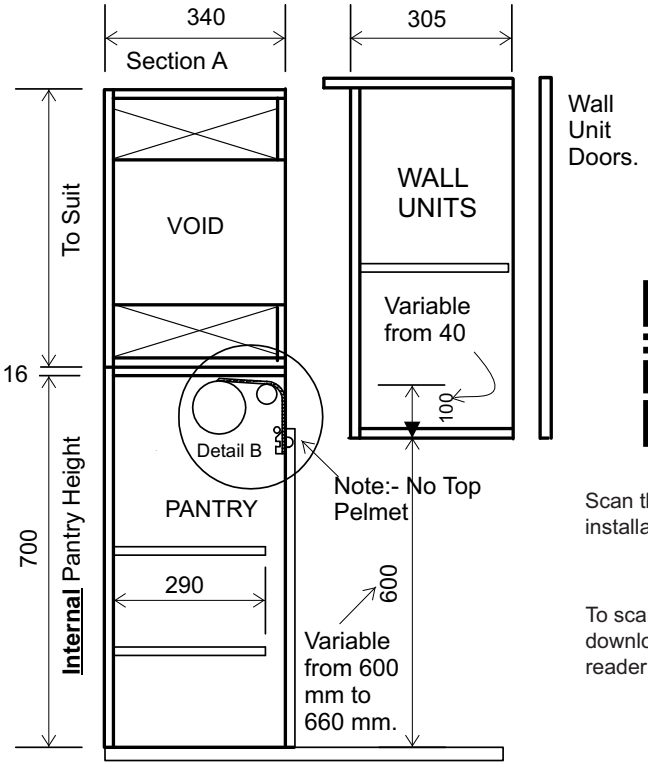

Scan the QR code to watch the installation guide video.

To scan the QR Code, simply download a free QR or Barcode reader app onto your smart